Bambu Lab P3C

Quick Start Guide

Please review the entire guide before using the product.

Safety notice: Do not connect to power until the assembly is complete.

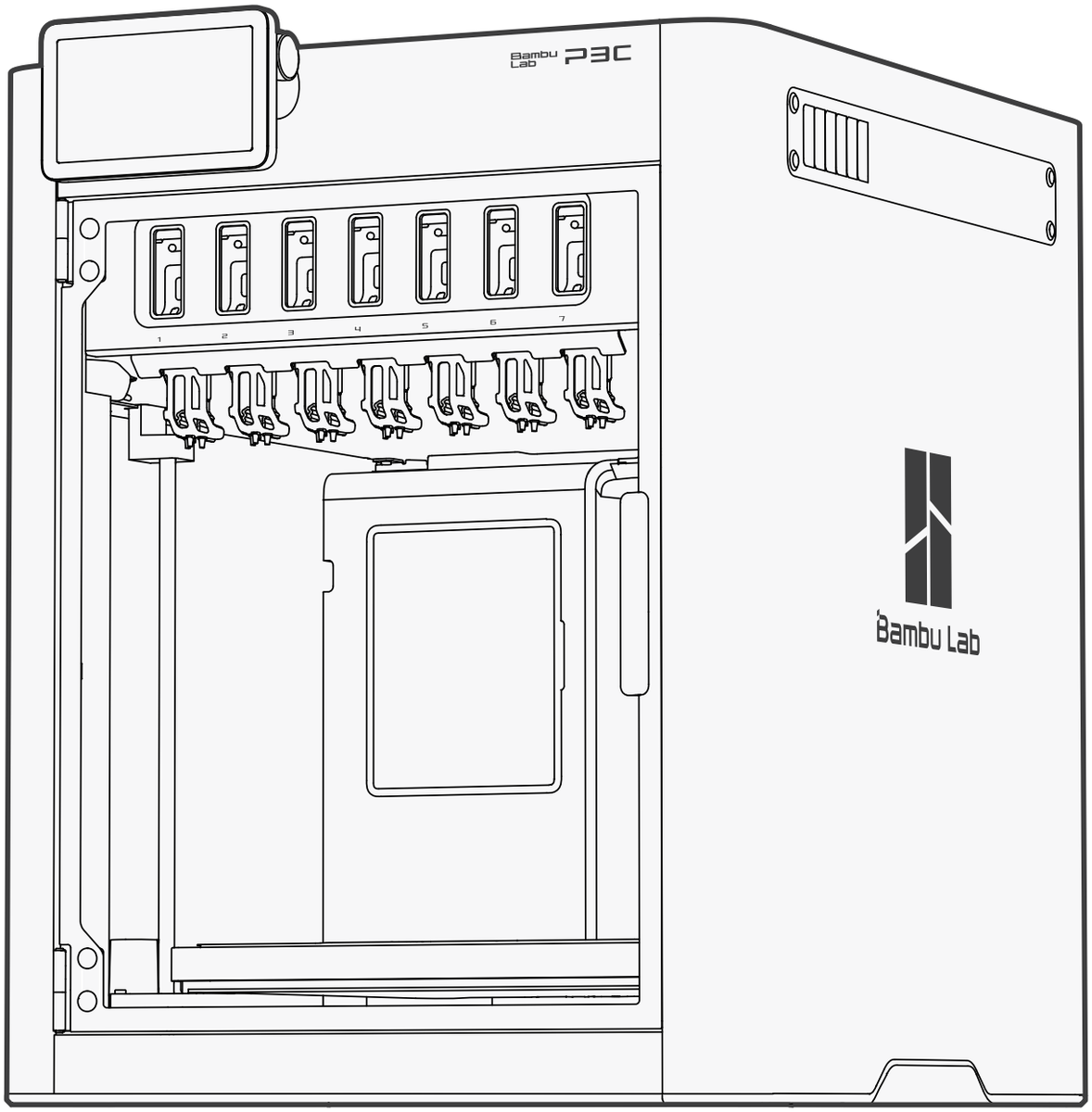

PF006-P

V2.0

Video Guide
Watch a step-by-step video and get started quickly.
bambulab.com/p3c-quick-start

Learn with Bambu Academy
Visit Bambu Academy and explore printer and software courses from beginner to advanced levels to enhance your 3D printing skills.
bambulab.com/academy

Get Online Manuals
Browse and download the latest product documentation in multiple languages.
bambulab.com/support/documentation

Explore More Cool Models
Visit MakerWorld, our models community, to find a variety of free models and bring your ideas to life using the creativity tools in MakerLab and accessories in Maker's Supply.
makerworld.com

Table of Contents

1. Read Before Use..... 4

2. Printer Component Introduction..... 6

3. Toolhead Component Introduction..... 9

4. SwapTek Rack & PrintTool Component Introduction..... 10

5. Included Accessories..... 11

6. Unboxing and Installation..... 13

   6.1 Remove the Package..... 14

   6.2 Unlock the Toolhead..... 17

   6.3 Unlock the Heatbed..... 18

   6.4 Unlock the SwapTek Rack..... 19

   6.5 Install the Touchscreen..... 20

   6.6 Install AMS 3P..... 22

7. Plug in the Power Cord and Power On..... 23

8. Bind the Printer - Bambu Handy..... 24

9. Bind the Printer - Bambu Studio..... 25

10. Load Filament..... 26

11. First Print..... 29

Table of Contents

12. Assemble the Scraper (Optional)....30

13. After-Print Notes....31

14. Printer Regular Maintenance.... 32

15. Printer Specifications....34

16. Technical Support.... 39

1. Read Before Use



To ensure safety and optimal performance, please follow these guidelines:

- Packaging materials and accessories may be updated from time to time. Please refer to the version you receive.
- Verify that the printer's operating voltage matches the specified requirements to avoid damage or safety hazards. This can be checked on the label next to the power socket. Refer to the "Printer Specifications" section for details.
- Regular maintenance is essential to keep the printer's complex mechanisms running smoothly. For guidance, see the "Printer Regular Maintenance" section.
- For best results, we recommend using Bambu filaments, which have been rigorously tested for compatibility, safety, and stability with the product.
- Please ensure that the PrintTools are placed in the correct docks. If the system prompts a PrintTool placement error, please check and reposition it immediately.
- The AMS 3P is equipped with bypass feeds. When printing TPU with a hardness level of 95A or lower, connect the filament directly to the PrintTool through the bypass feed instead of feeding through the filament loader.
- PVA is highly hygroscopic. Please dry it thoroughly before printing to prevent print failures due to moisture absorption.
- PLA Glow and carbon or glass-fiber-reinforced filaments may encounter high resistance when passing through the AMS 3P feeding funnel. We recommend loading these materials from an external spool through the rear of the printer. PPA-CF is prone to breaking when fed through the AMS 3P. Load it from an external spool instead.
- Avoid printing with filaments that have significantly different temperature requirements at

the same time. Low-temperature filaments may soften or melt prematurely in a high-temperature environment, potentially causing nozzle clogs.

- During printing, do not reach into the movement range of the heatbed, toolhead, or SwapTek rack to avoid burns or pinching injuries.
- The SwapTek rack is located at the front of the printer. Please pay attention to the hotend indicator status on the dock: an orange breathing light indicates the hotend is heating, and a solid orange light indicates heating is complete. Do not touch the hotend in either of these states to avoid burns.
- The printer can connect to additional AMS, AMS 2 Pro, and AMS HT units via an optional buffer for external AMS.
- The maximum number of external devices is 8, of which up to 4 can be AMS devices.

2. Printer Component Introduction

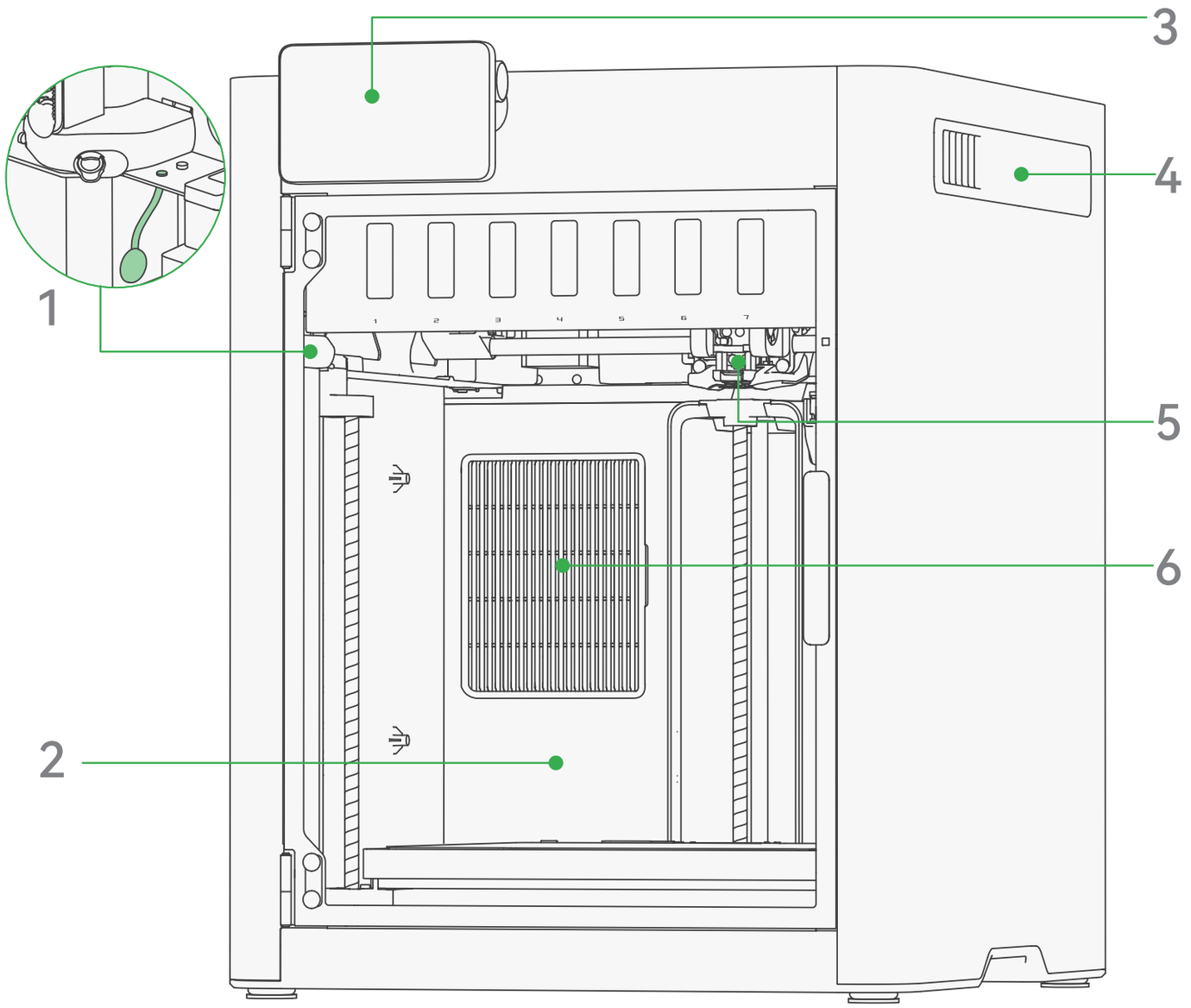

Figure 1

1) Live View Camera & Privacy Cover
2) Adaptive Airflow Assembly - Rear
3) Touchscreen
4) Service Panel
5) Toolhead
6) Air Filter

2. Printer Component Introduction

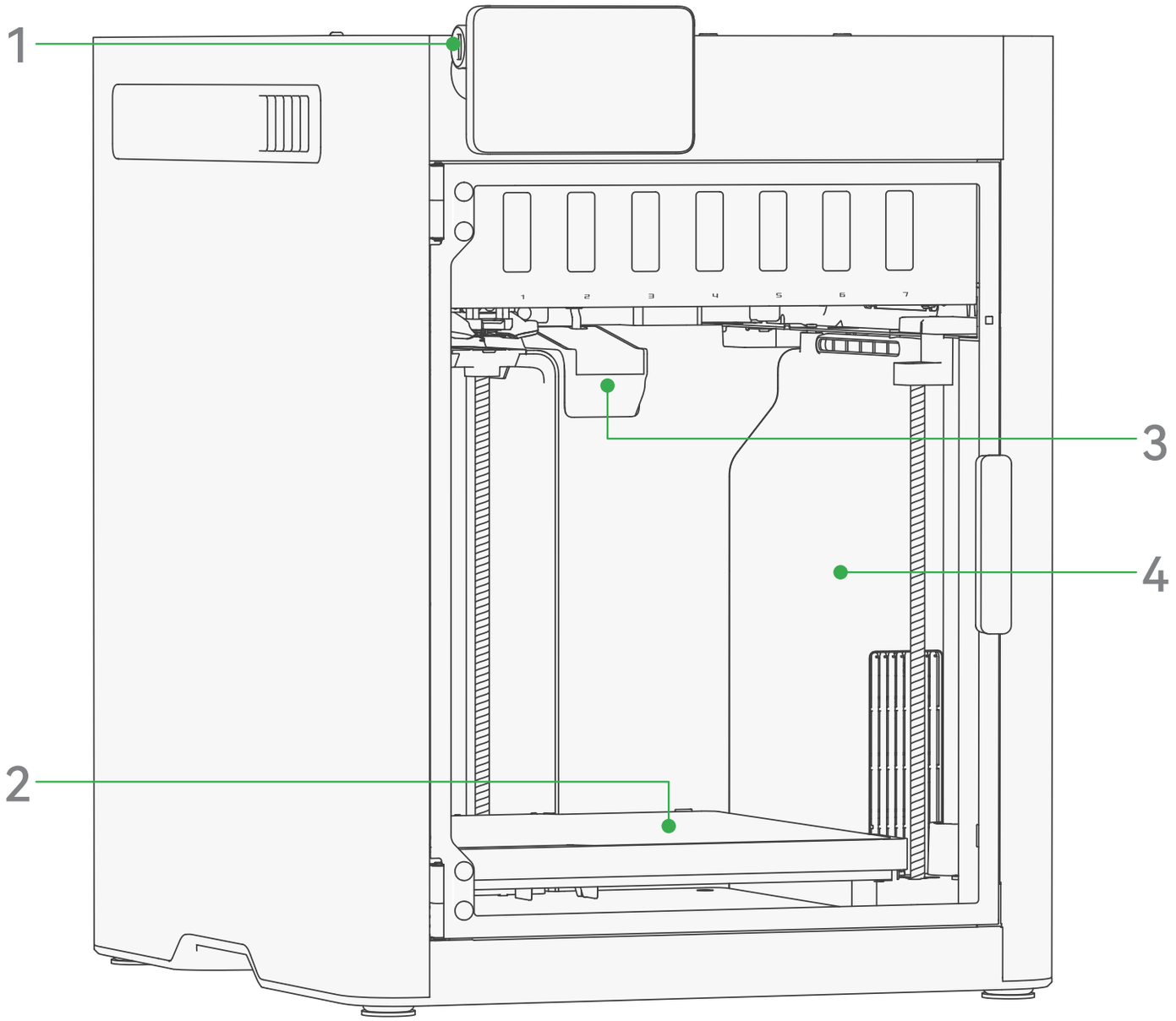

Figure 2

1) USB Port
2) Heatbed
3) Purge Wiper
4) Auxiliary Part Cooling Fan - Right

2. Printer Component Introduction

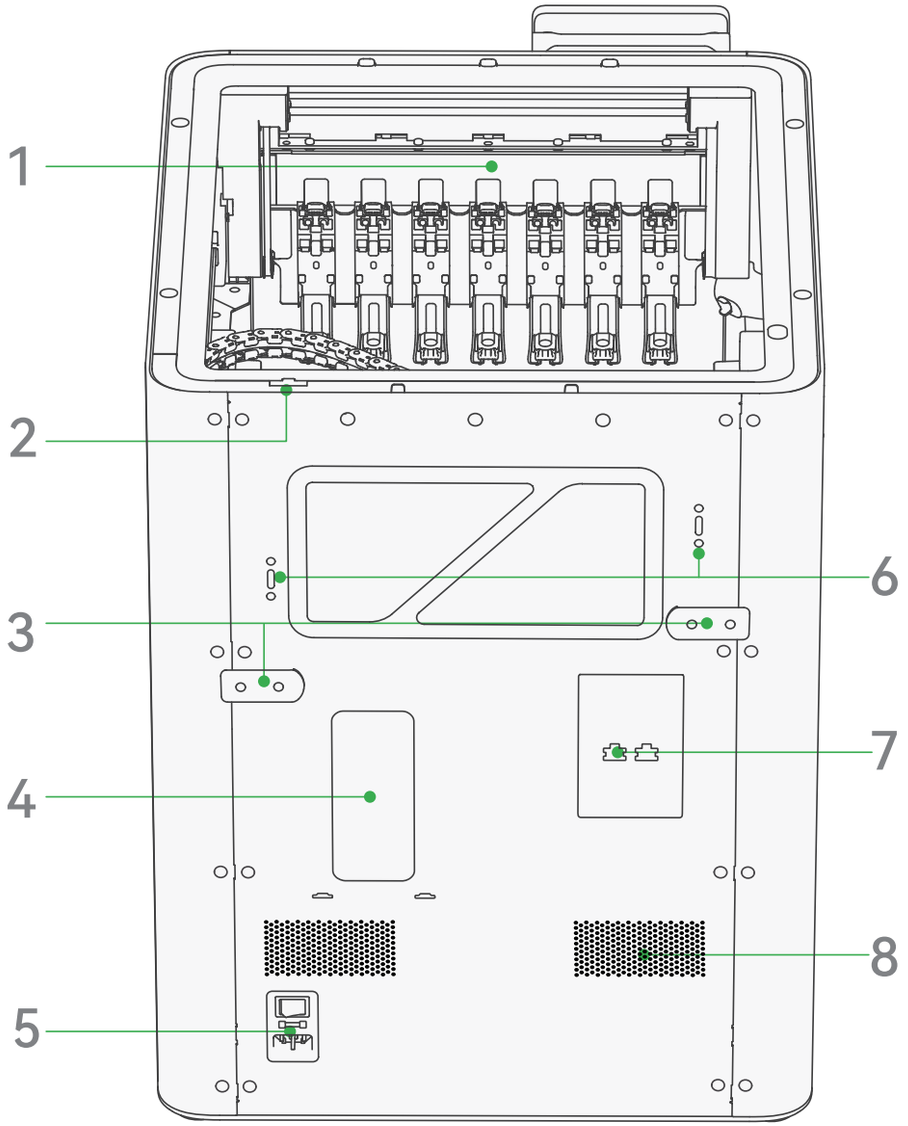

Figure 3

1) SwapTek Rack
2) Tool Control Board Port
3) Spool Holder Brackets
4) Purge Chute
5) Power Socket
6) Belt Tensioners
7) Bambu Bus Port 6-pin
8) Exhaust Opening

3. Toolhead Component Introduction

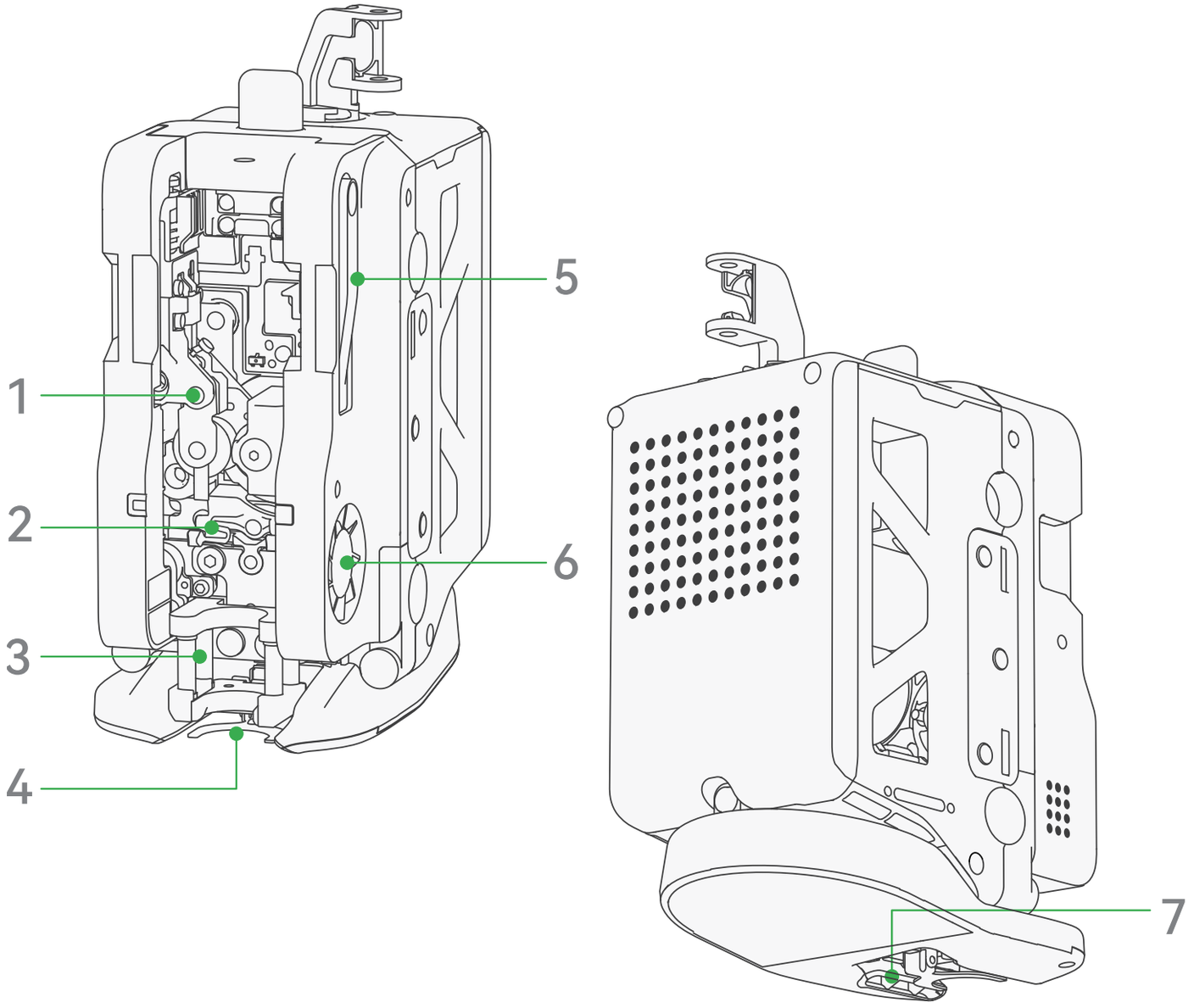

1) Idler Assembly
2) ToolLock Assembly
3) Tool Holder
4) Nozzle Clumping Sensor Assembly
5) Cutter Push Arm
6) Hotend Cooling Fan
7) Part Cooling Fan

4. SwapTek Rack & PrintTool Component Introduction

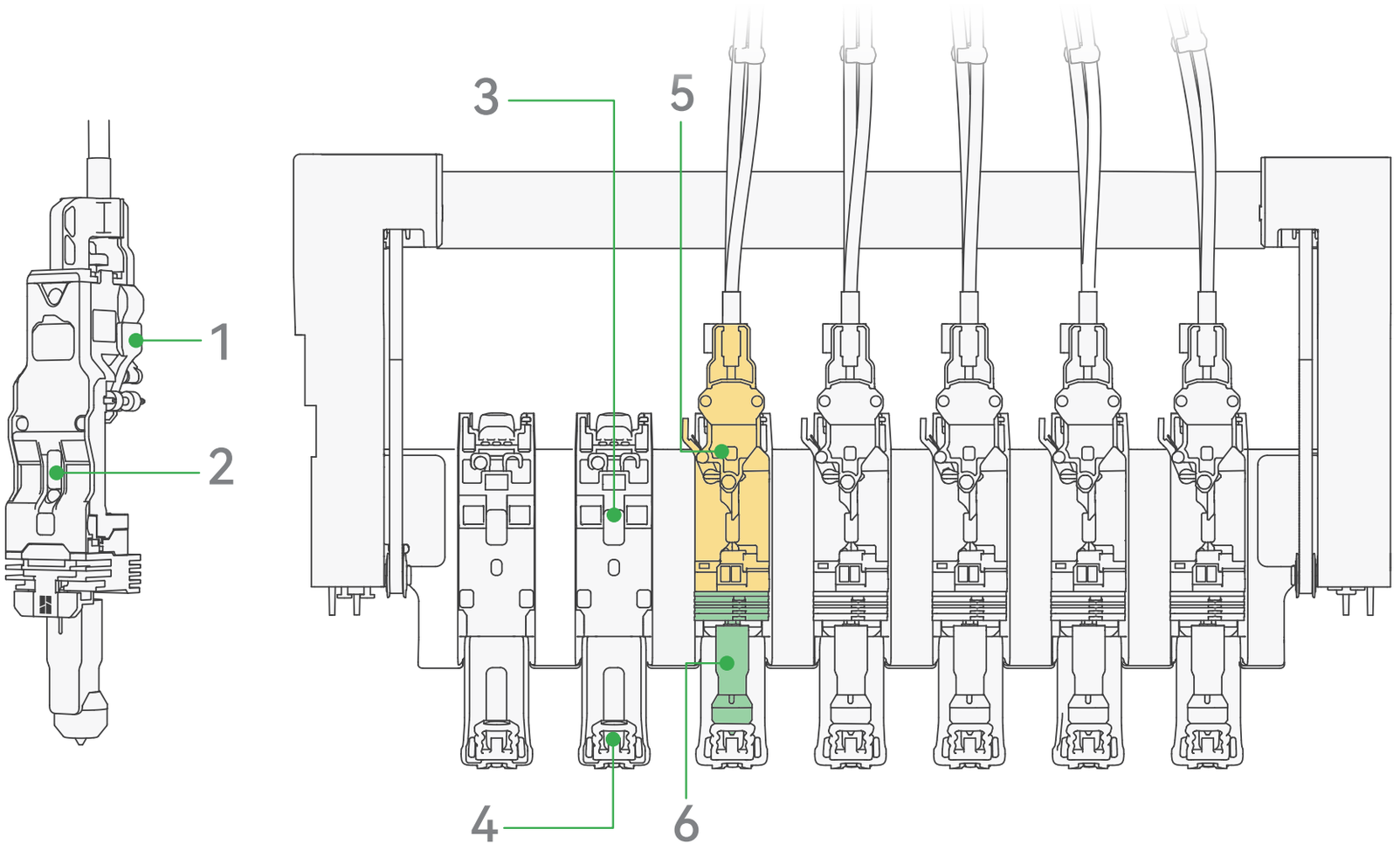

1) Cutter Actuator
2) FeedView
3) Dock Assembly
4) Flow Blocker Assembly
5) PrintTool Base
6) Hotend

5. Included Accessories

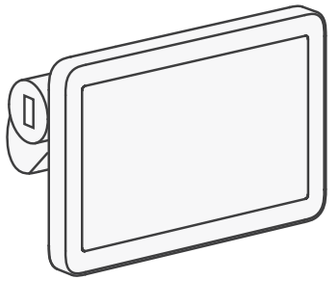

1) Touchscreen

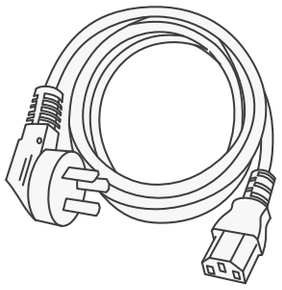

2) Printer Power Cord

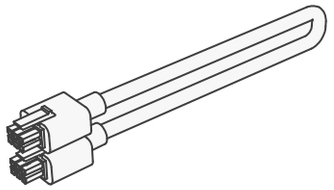

3) Bambu Bus Cable 6-pin

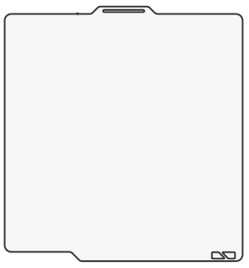

4) Build Plate (Pre-installed on the heatbed)

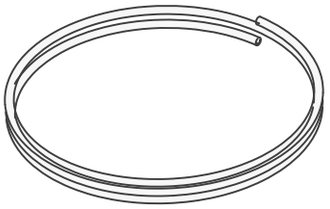

5) FEP Tube

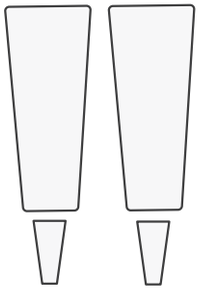

6) Lubricant Grease & Lubricant Oil



7) Grease for Toolhead

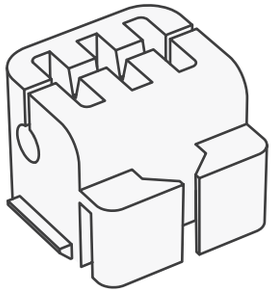

8) Nozzle Wiping Pad

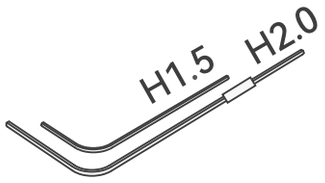

9) Allen Key H1.5
Allen Key H2.0

5. Included Accessories

10) Unclogging Pin

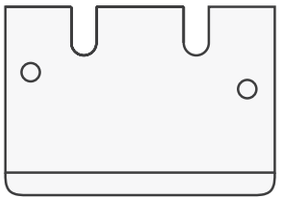

11) Scraper Blade

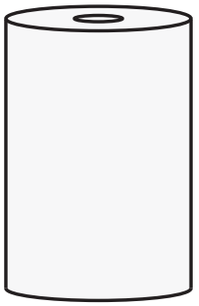

12) Toolhead Motor Release Socket

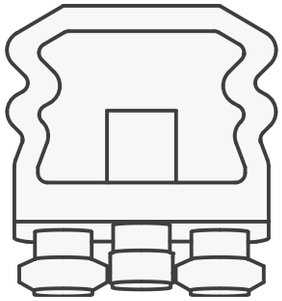

13) Flow Blocker Pad

6. Unboxing and Installation

Keep packaging materials and screws for shipping.

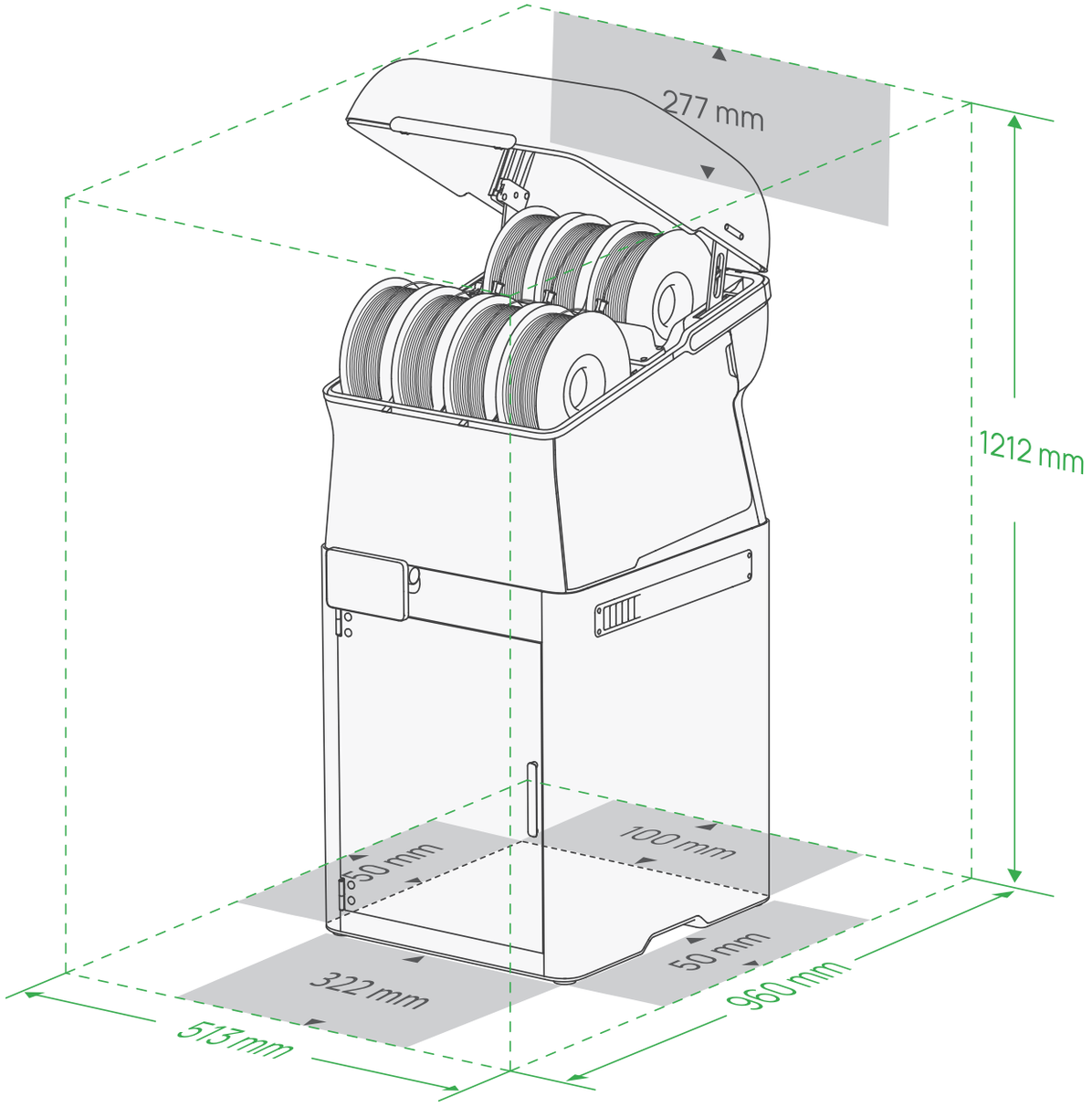

The assembled printer measures 413*538*935 mm. Place it on the floor or a low, stable surface, and leave at least 513*960*1212 mm of space for operation.

If you purchased the Bambu Station, assemble it according to the tutorial, then place the printer on top.

6.1 Remove the Package

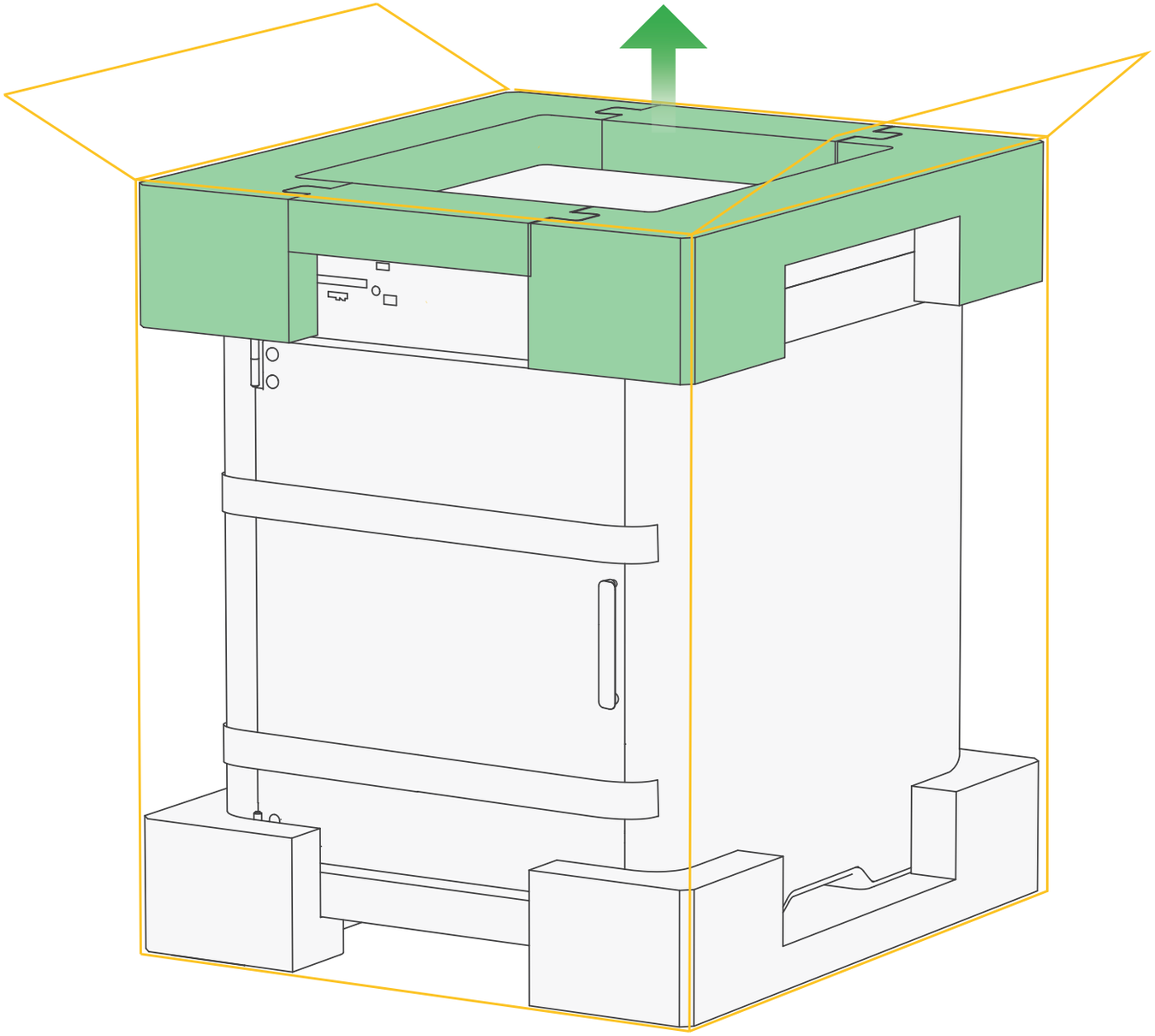

1) Open the box and take out the top foam.

6.1 Remove the Package

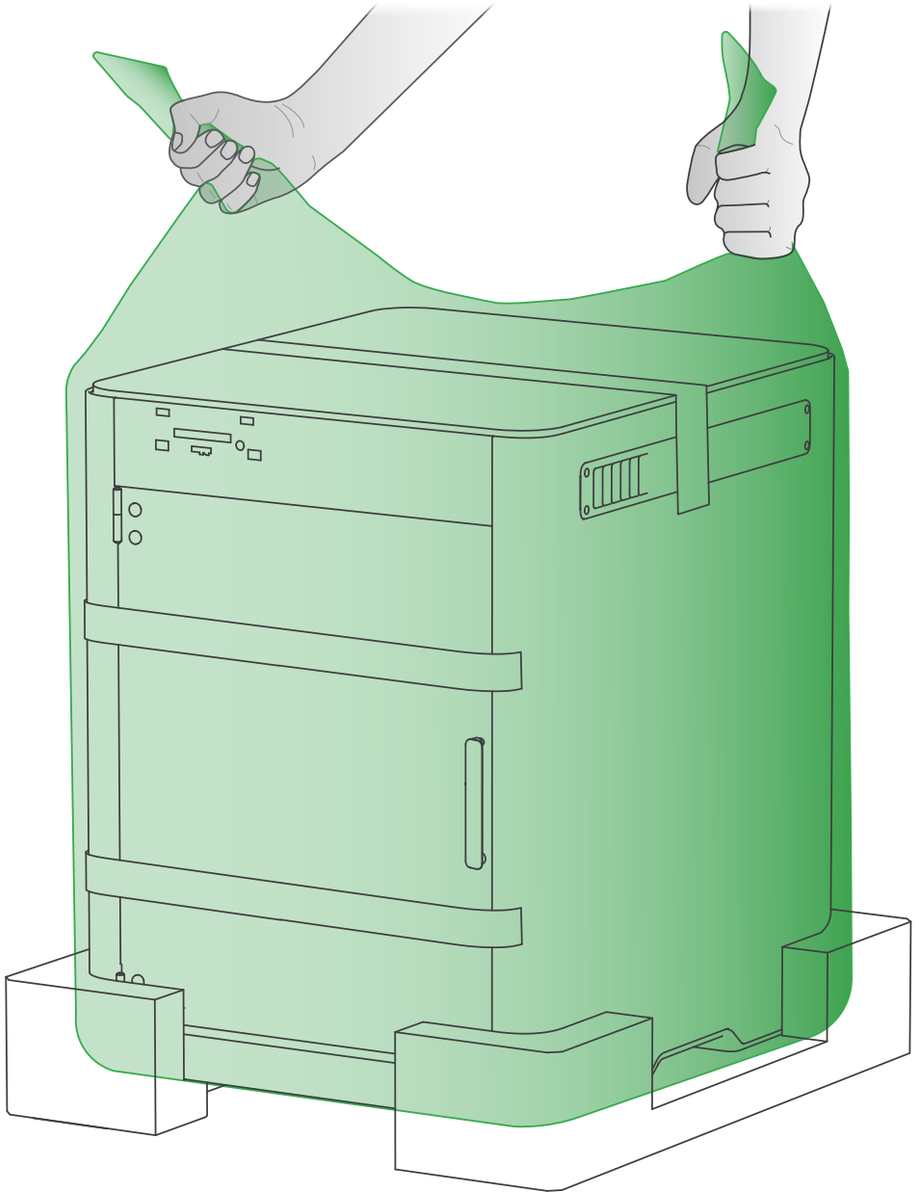

2) Hold the two top corners of the moisture-proof bag to lift out the printer, then place the printer on the floor or on a stable, low surface.

6.1 Remove the Package



3) Tear open and remove the moisture-proof bag, then remove all tape and protective film from the printer. Take out the toolbox and all accessories embedded in the top cardboard, then remove the cardboard.

6.2 Unlock the Toolhead

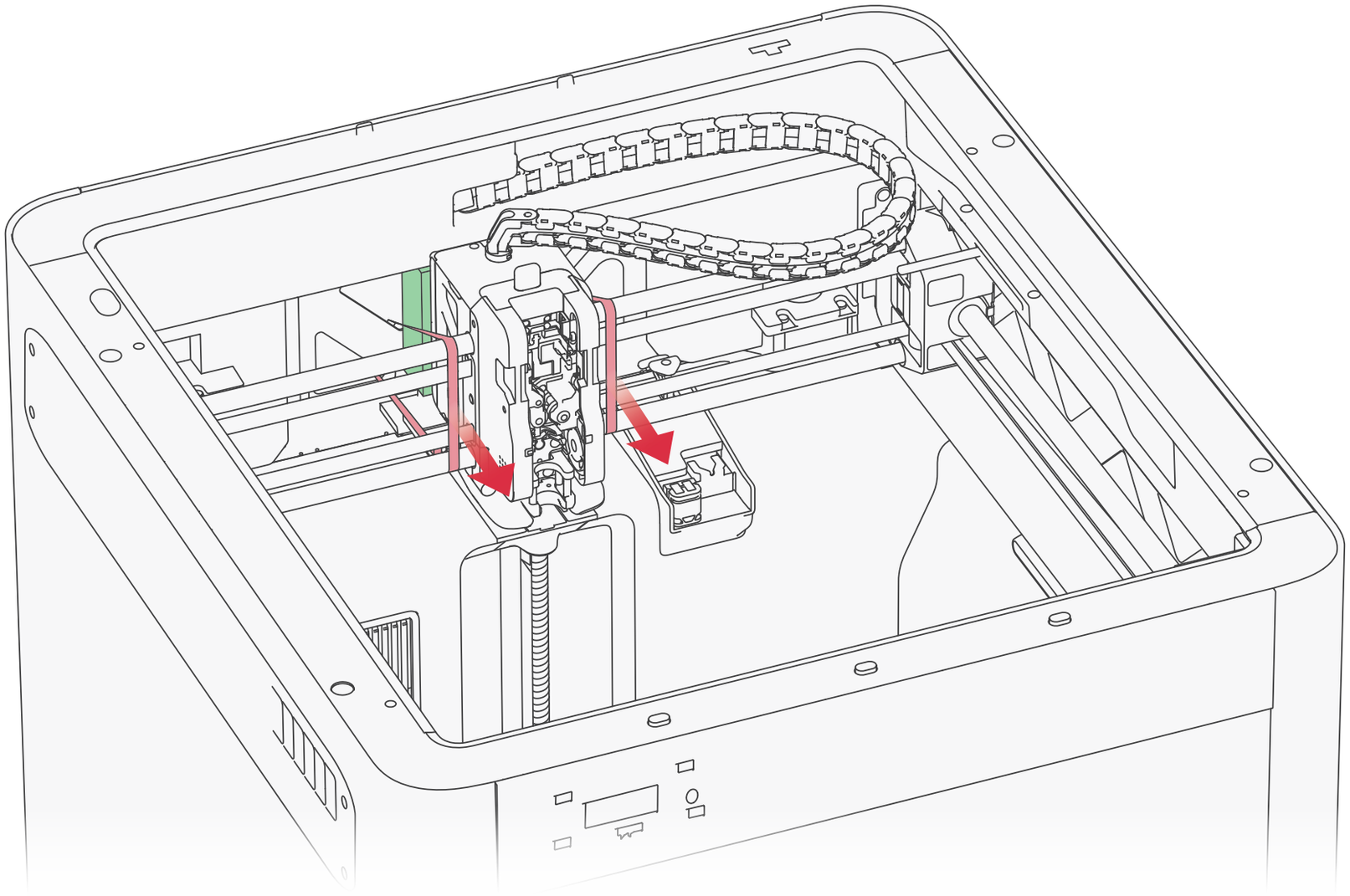

1) Remove the foam on the cable chain, then cut and remove all zip ties from the linear rods and toolhead.
   Keep away from the belt when cutting ties.
2) Pull the toolhead toward the front door to remove the foam behind it, then push the toolhead back to the rear of the chamber.

6.3 Unlock the Heatbed

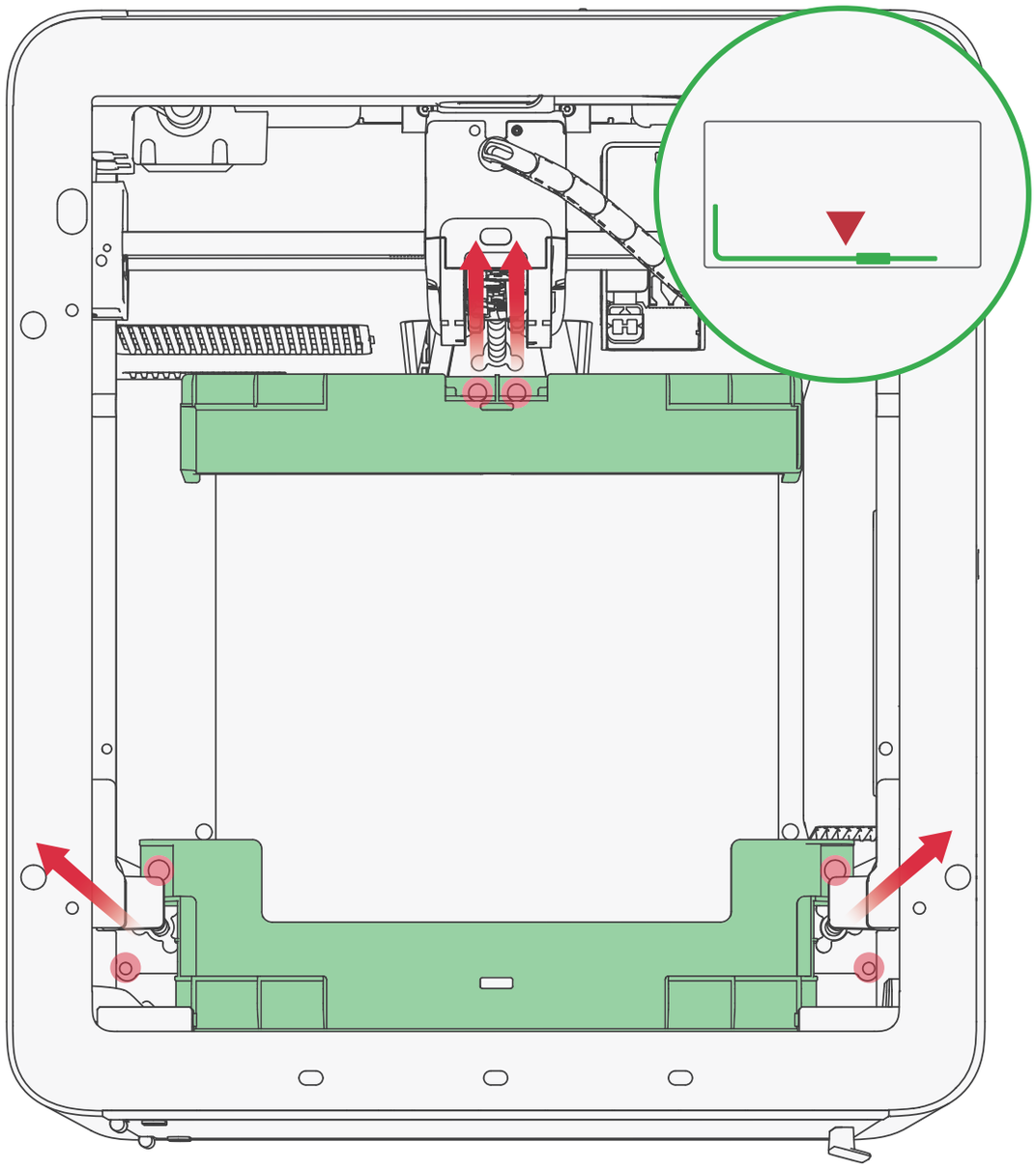

Use the longer H2.0 Allen key from the toolbox to remove the 6 red-marked screws, then take out the green-marked transport fixtures shown in the figure.

Remove the foam under the heatbed after the initial calibration is complete.

Attach the magnet from the toolbox near the long end of the Allen key to prevent screws from dropping during operation.

6.4 Unlock the SwapTek Rack

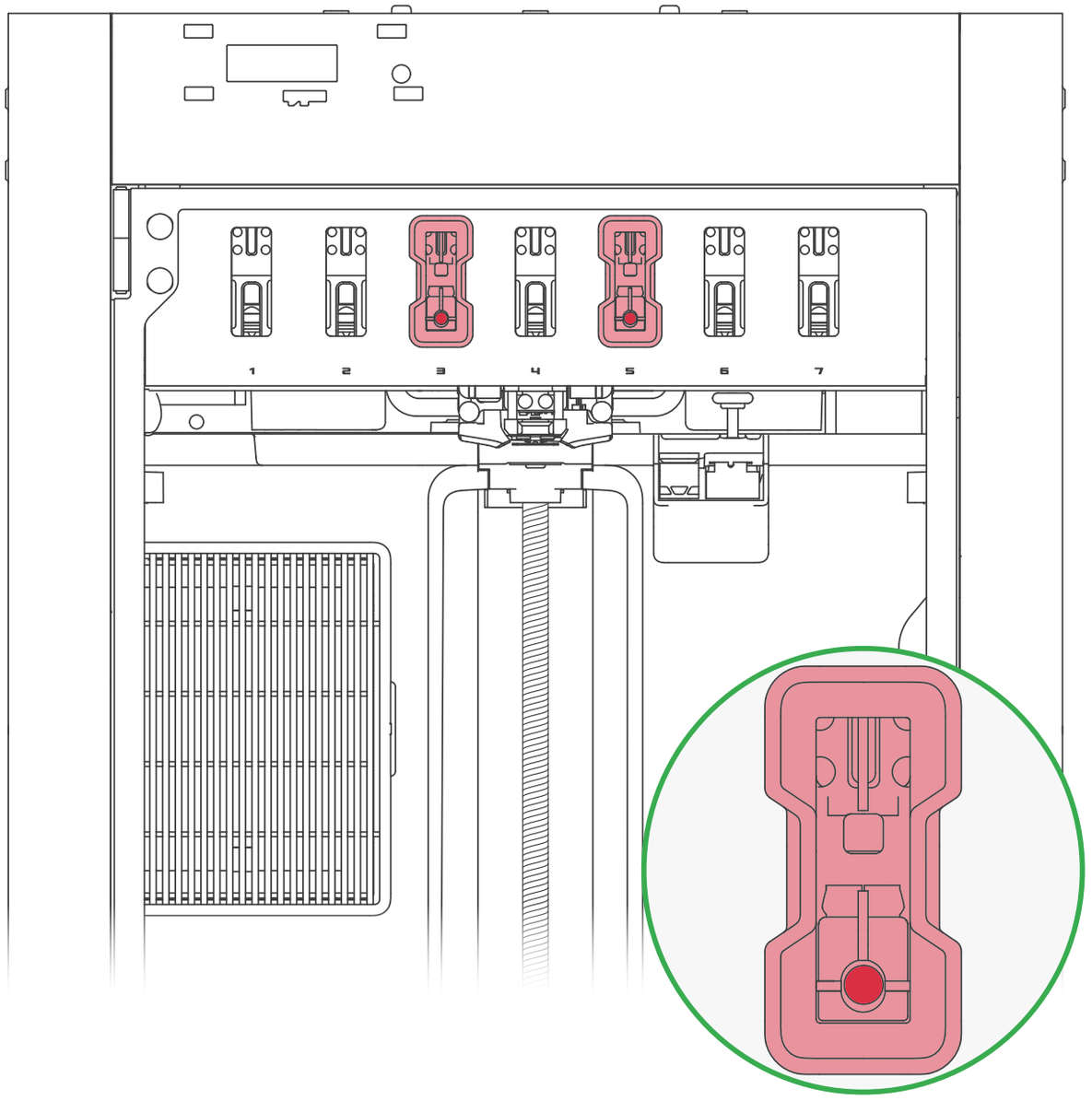

Open the glass front door. Use the H2.0 Allen key to remove 2 screws, then take out the 2 red retainers.

6.5 Install the Touchscreen

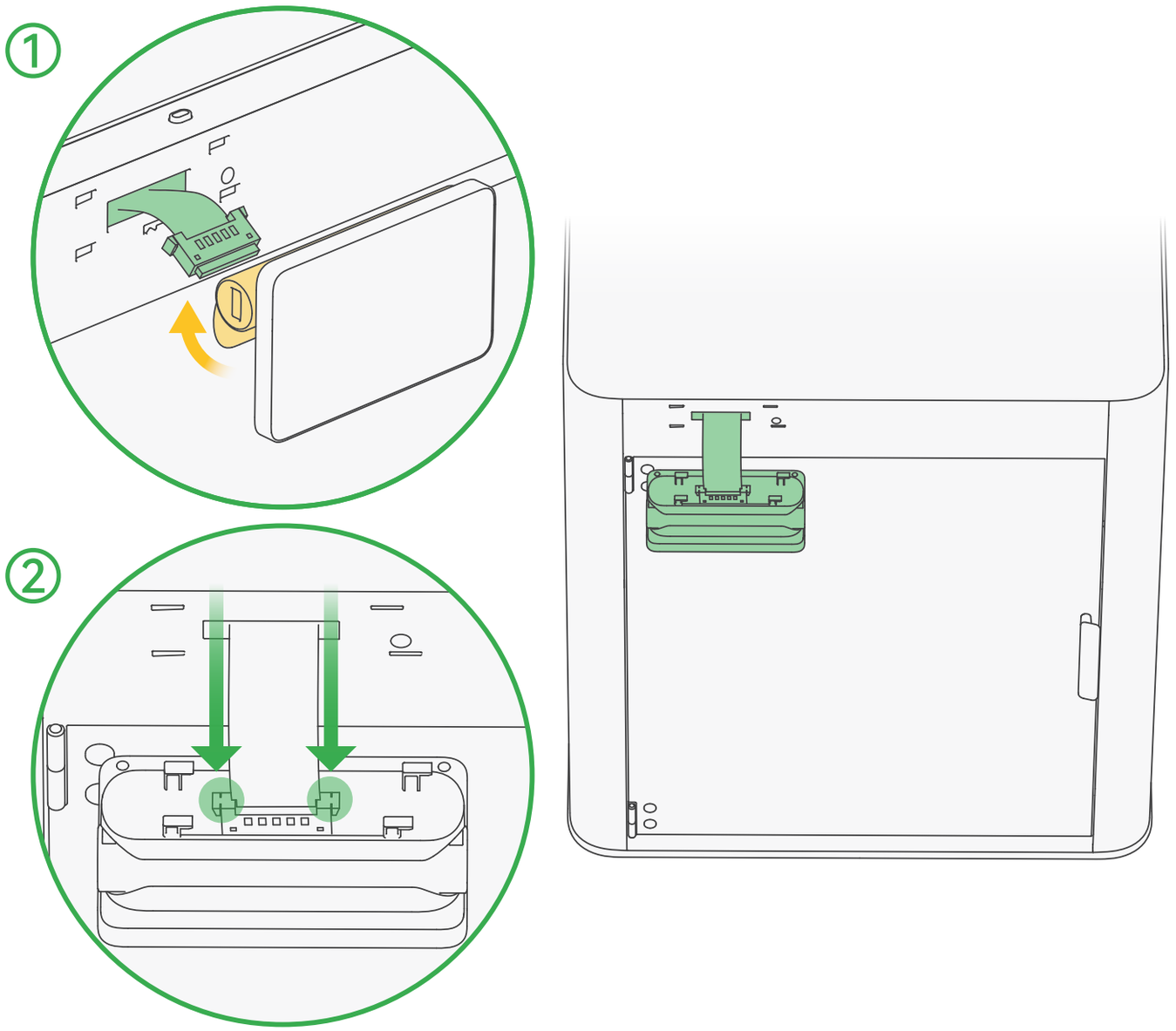

1) Remove the tape securing the flexible cable. Take the touchscreen and orient it with the USB port towards the left side, then rotate the rear hinge upward until the screen port is fully exposed.
2) Insert the flexible cable into the screen port.
   Do not pull the cable forcefully, as this may cause damage.

6.5 Install the Touchscreen

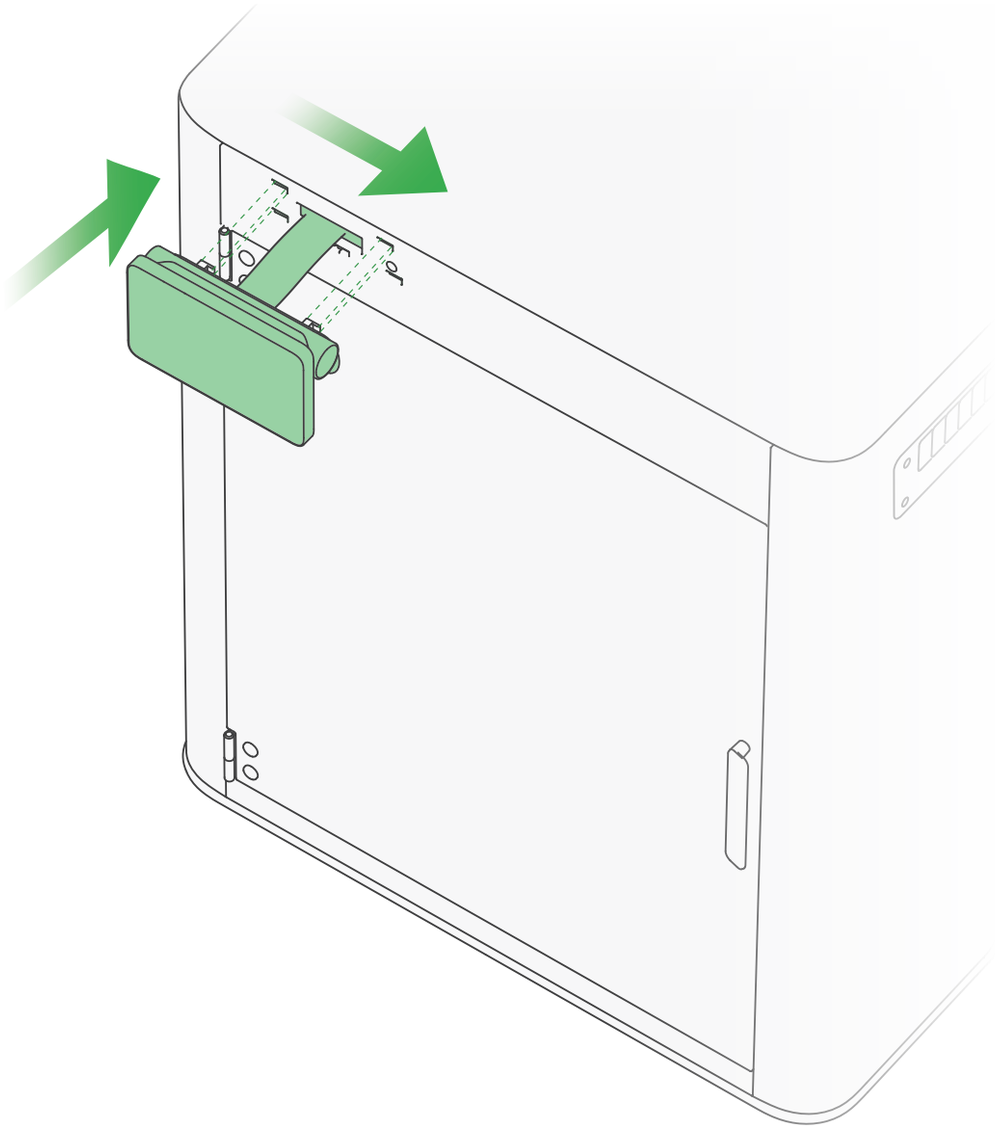

3) Tuck the flexible cable back into the printer slot, then align the touchscreen with the holes and insert it. Push the screen hinge to the right until you hear a click.
Gently wiggle the touchscreen. If it does not feel loose, it is installed correctly.

6.6 Install AMS 3P

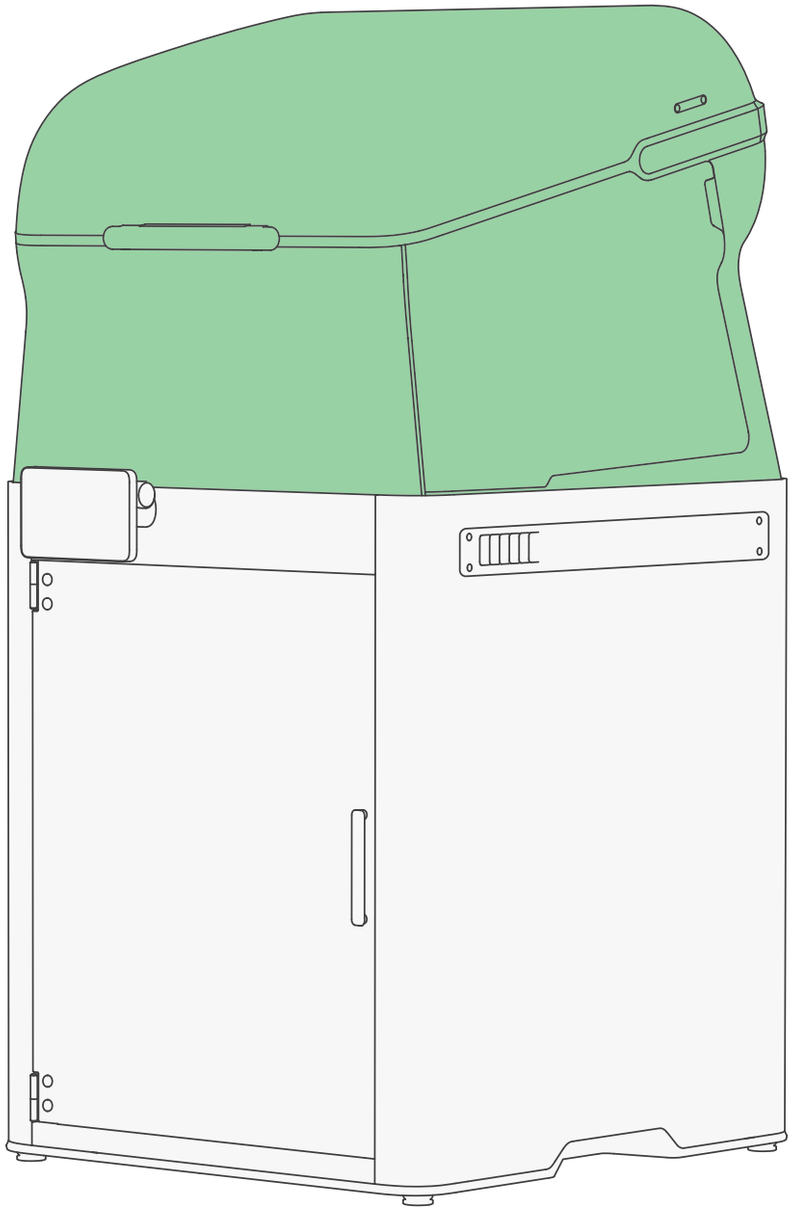

The printer must be used with the AMS 3P. Before connecting the power cord and turning on the printer, follow the AMS 3P Quick Start Guide to install the AMS 3P.

Keep the toolbox and remaining accessories for installing the AMS 3P later.

7. Plug in the Power Cord and Power On

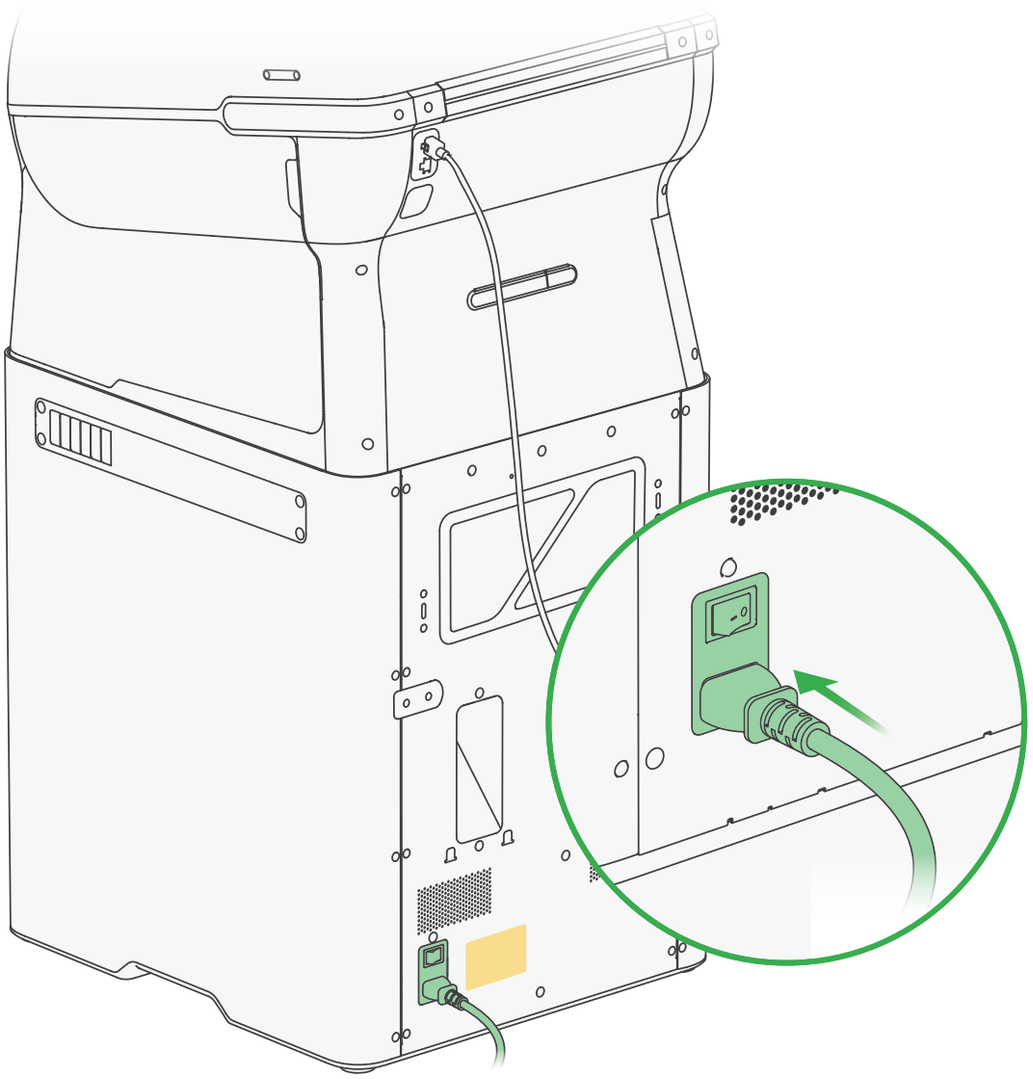

Ensure the voltage specified on the label near the printer power socket matches the local voltage. Then connect the power cord and turn on the power switch.

8. Bind the Printer - Bambu Handy

1) Scan the QR code on the right to download Bambu Handy. Register and log in to your Bambu Lab account.



2) Follow the instructions on the screen until a QR code appears.

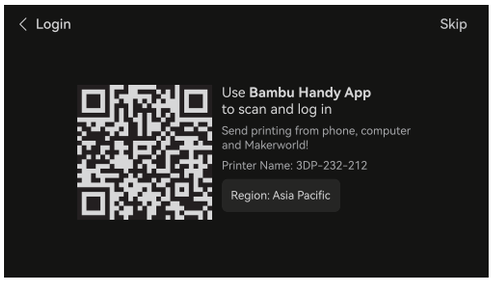

3) Scan the QR code on Bambu Handy to bind the printer to your Bambu Lab account.

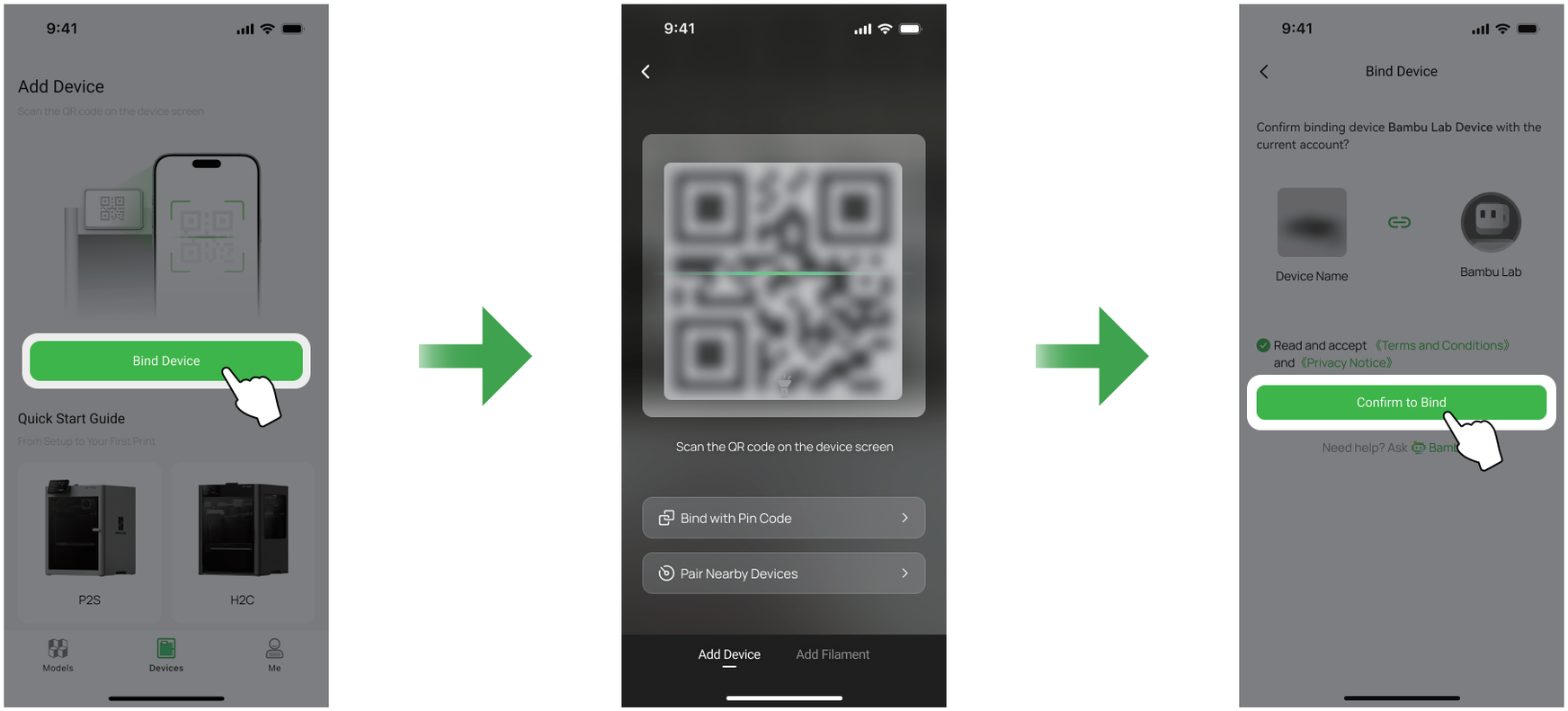

4) Follow the instructions on the screen to complete the initial calibration. It is normal to have vibration and noise during the process.
5) After the initial calibration is complete, remove the foam from under the heatbed.

9. Bind the Printer - Bambu Studio

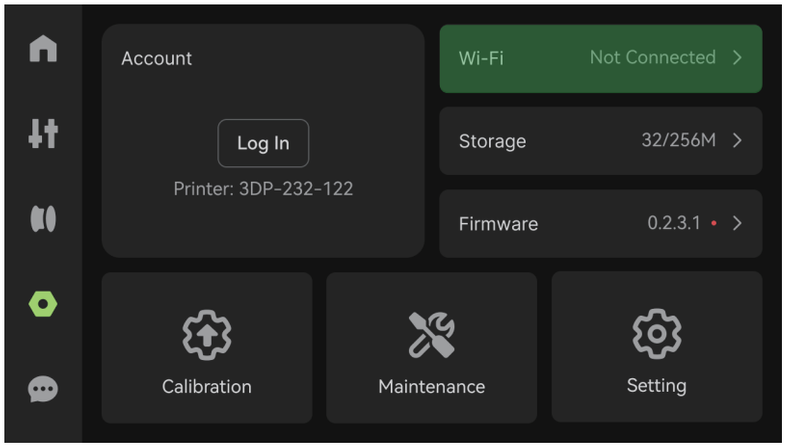

1) Connect both the computer and printer to the **same wireless network**, and do not use a **guest network** that has network device separation enabled.

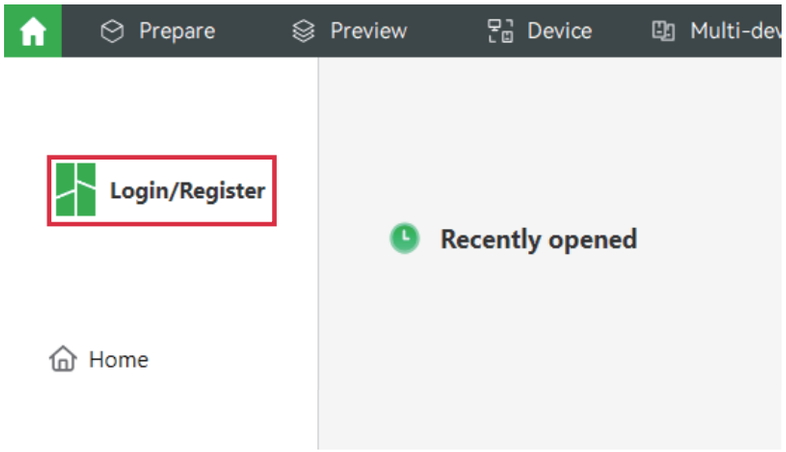

2) Visit the link below to download and install Bambu Studio. Register and log in to your Bambu Lab account.
bambulab.com/download/studio

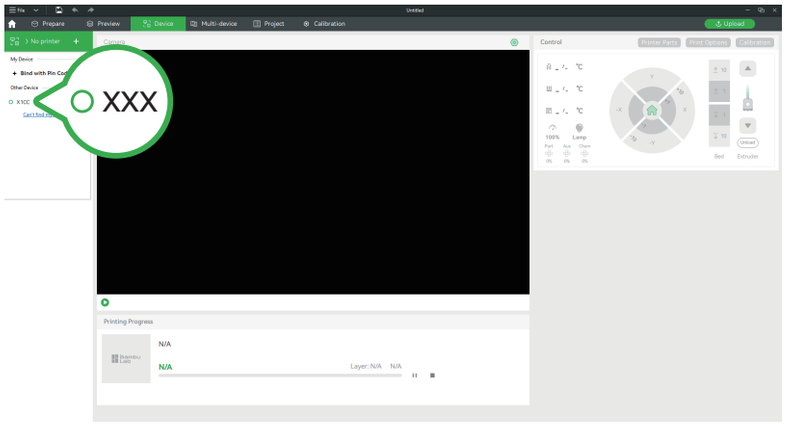

3) Click “+” on the device page, and Bambu Studio automatically discovers printers on the same network. Click the detected printer to bind it to your Bambu Lab account.

10. Load Filament

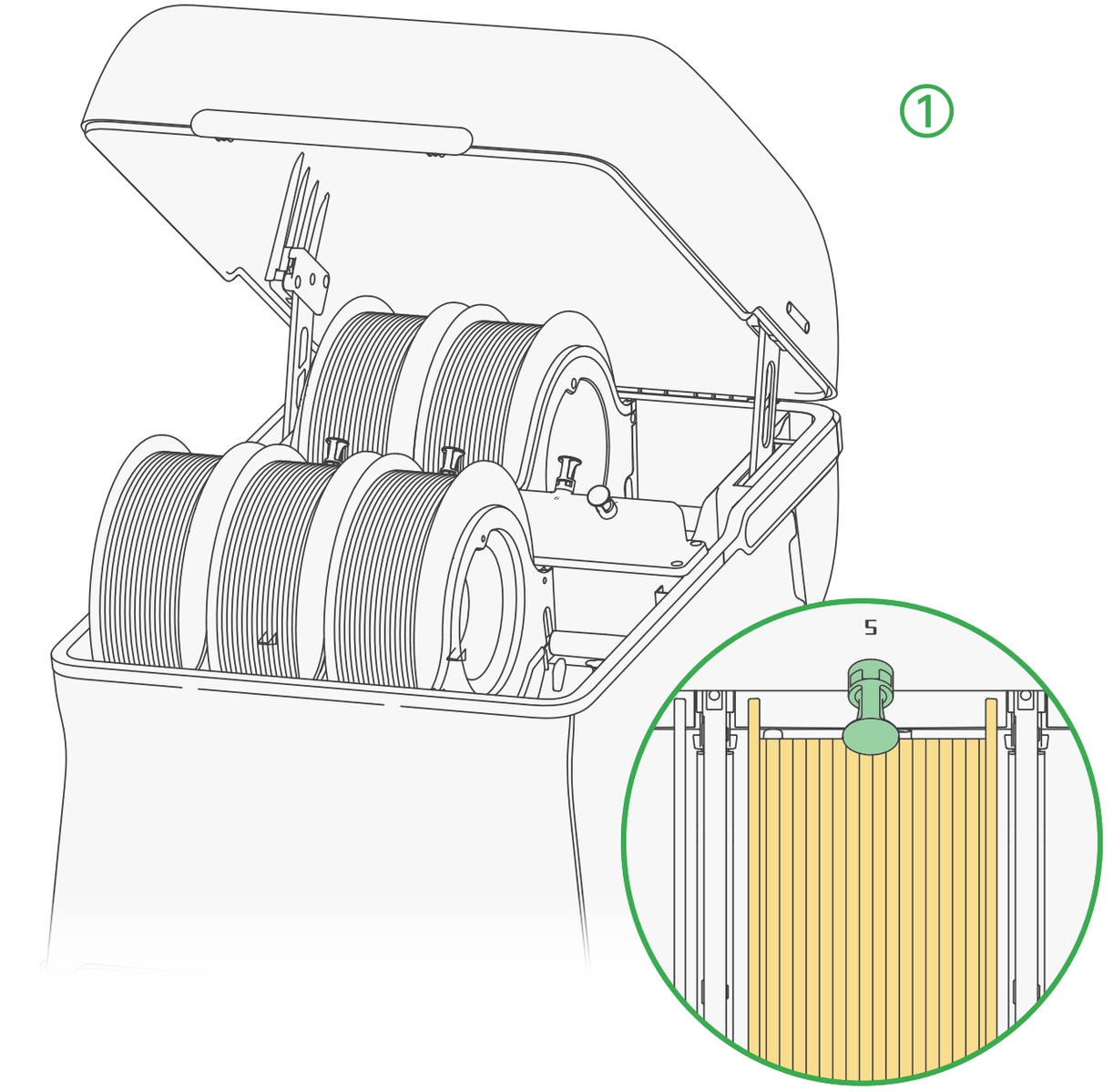

1) Power on the printer and place the filament spool into any slot from 1 to 5. Ensure the spool is correctly placed in the spool slot.
   Do not feed the filament into the PrintTool now. Follow the steps below.

10. Load Filament



2) On the printer screen, tap › to read all filament information.
The printer cannot read third-party filament. Edit the filament information manually.

3) After the filament information is updated, tap **Load** to select filament.



4) Tap **Select All** › **Load**, then manually feed the filaments one by one following the on-screen loading prompts.

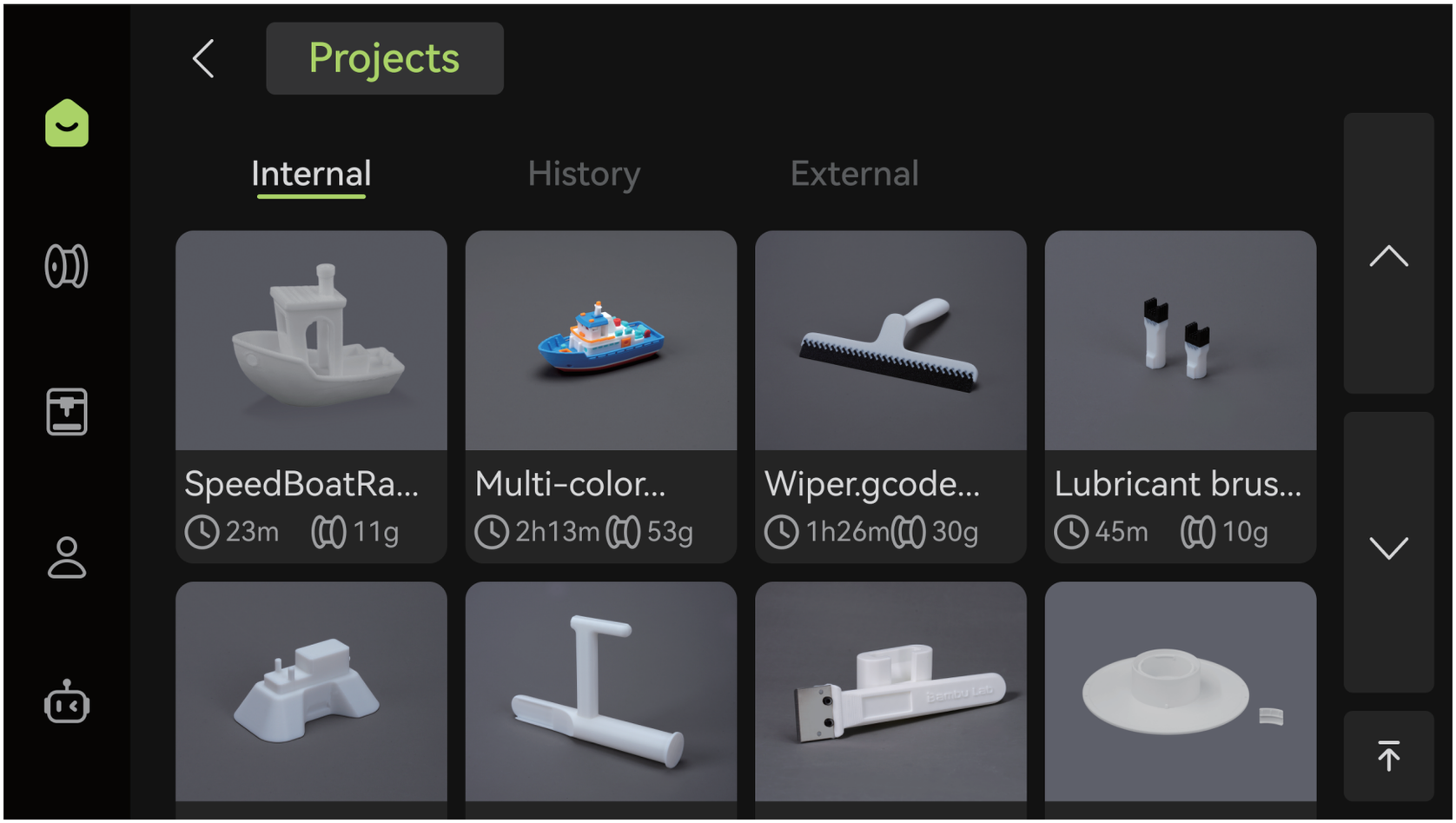

Tap - File, select a model, and follow the on-screen instructions.

* The included textured PEI plate is sensitive to dirt and oil. If you touch the plate, oil from your hands may reduce adhesion. Wash the plate with hot water and dish soap before printing to ensure optimal adhesion.

12. Assemble the Scraper (Optional)

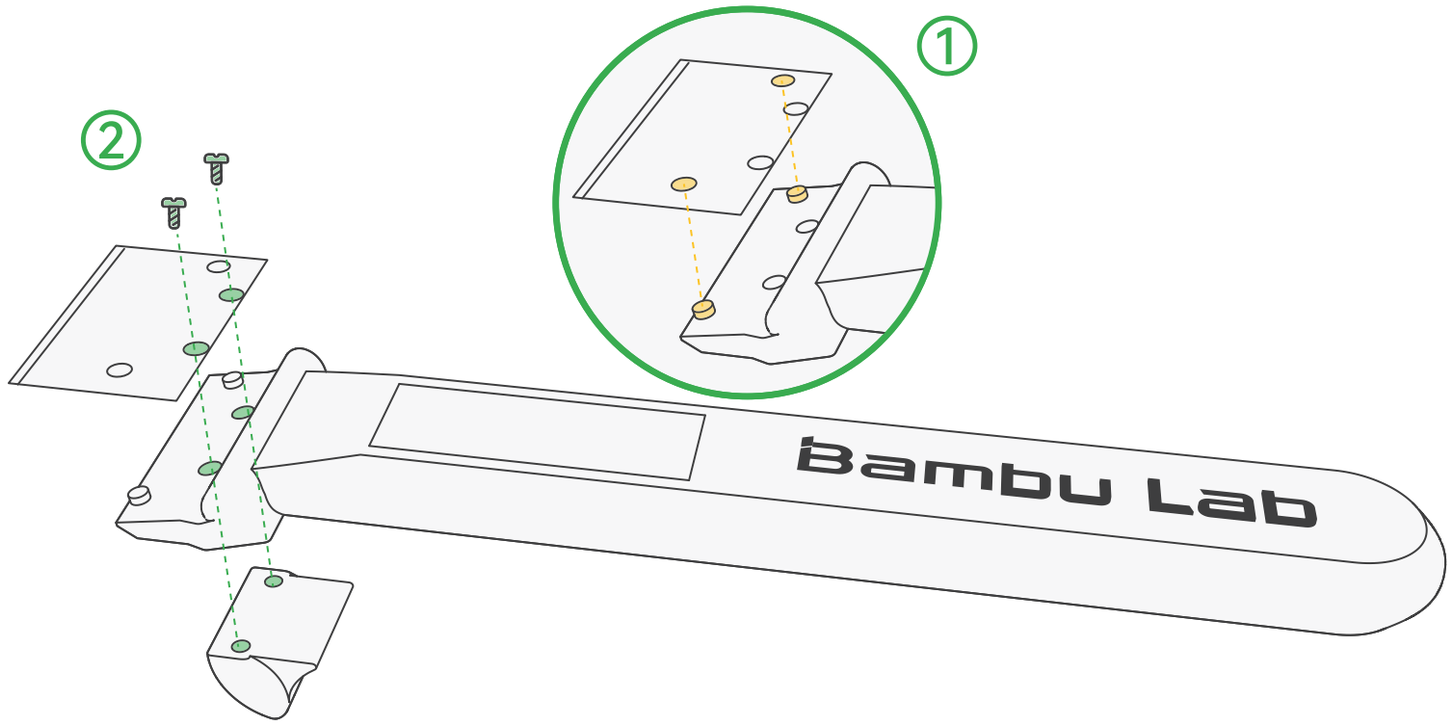

The scraper helps remove models and clean the prime line. We recommend this built-in model for your first print.

1) Print the scraper handle, then snap the blade onto the raised section of the handle.
   If the blade does not snap into place, it is facing the wrong way. Flip it over and try again. Make sure the blade is installed in the correct orientation. Otherwise, it may come loose during use and cause personal injury.
2) Align the screw holes in the blade, handle, and finger rest block. Use the H2.0 Allen key to tighten the 2 screws.
   The blade is sharp. Handle it with care during assembly to avoid cuts. Keep the scraper out of reach of children.

13. After-Print Notes



Wait until the build plate fully cools down to remove prints.

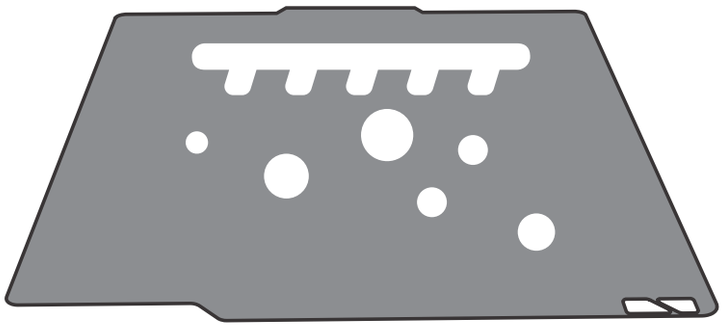

Wash the build plate regularly with hot water and detergent for best adhesion.

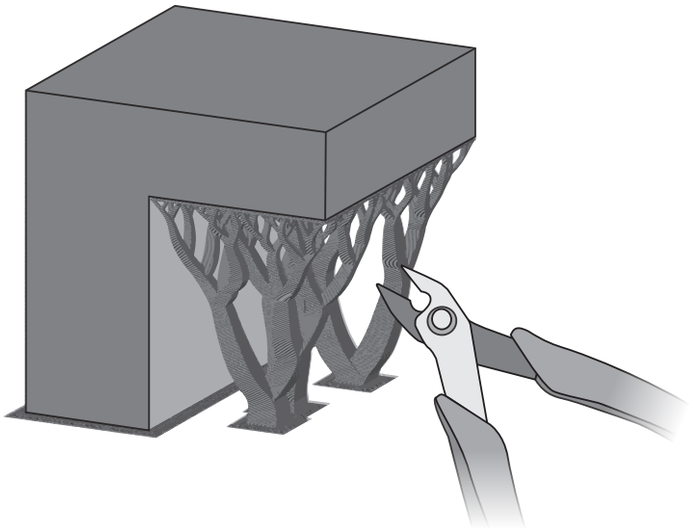

If there is a support structure used, remove it as soon as possible after taking out the print. It will be harder to remove if the filament absorbs moisture.

14. Printer Regular Maintenance

A 3D printer has a complex mechanical structure and numerous moving parts. Regular maintenance is essential to ensure stable operation and high-quality prints.

Metal moving parts:

- Lubricate lead screws, linear rods, idler pulleys, and extruder gears regularly to prevent rust.
- Apply lubricant oil to linear rods and idler pulleys.
- Apply lubricant grease to lead screws and extruder gears.
- Apply grease for toolhead to the FlexFeed cam and ToolLock pin on the toolhead.

Consumables:

- Inspect the filament cutter and all plastic and rubber parts for signs of wear, deformation, or aging.
- Replace consumable parts as needed, such as the nozzle wiping pad, FEP/PTFE tubes, and flow blocker pads. Cut replacement FEP/PTFE tubes to the original length. Tubes that are too long or too short may affect printing.

Hotend:

Regularly use a brush to grip a nozzle cleaning sponge dipped in water to remove any filament stuck on the hotend surface to ensure optimal print quality.

Other components:

- Check camera lenses, fans, and filament sensors for dust or debris.
- Clean fans regularly: gently clean camera lenses using a microfiber cloth dipped in isopropyl or dehydrated alcohol for optimal clarity.

14. Printer Regular Maintenance

bambulab.com/p3c/maintenance

Visit the official Wiki section "Regular Maintenance Recommendations" for more information.

15. Printer Specifications

Printing Technology	
Type	Fused Filament Fabrication
Body	
Build Volume (L * W * H)	256*256*260 mm
Enclosure Type	Enclosed
Hotend Switching System	Bambu Lab SwapTek™ 7-Tool Switching[1)]
Chassis	Steel
Outer Frame	Plastic
Dimensions and Weight	
Package Dimensions	510*565*625 mm
Product Dimensions	413*538*540 mm
Recommended Installation Space	513*960*1212 mm
Net Weight	26.5 kg (including the AMS 3P)
Toolhead	
Extruder Gear	Hardened Steel
Included Nozzle Material	Hardened Steel
Max Nozzle Temperature	300 °C
Included Nozzle Diameter	0.4 mm
Supported Nozzle Diameter	0.2 mm, 0.4 mm, 0.6 mm, 0.8 mm
Filament Cutter	Built into the PrintTool
Expansion Options	Supports the CraftTool (CutTool, DrawTool, and more coming)
Supported Filament Diameter	1.75 mm, 2.85 mm (Bypass feed only)
Extruder Motor	Bambu Lab high-precision brushless servo motor with planetary gearbox
Heatbed	
Build Plate Material	Flexible Steel Plate

15. Printer Specifications

Included Build Plate Type	Textured PEI Plate
Supported Build Plate Type	Textured PEI Plate, Cool Plate SuperTack, Engineering Plate
Max Heatbed Temperature	110 °C
Speed	
Max Speed of Toolhead	1,400 mm/s
Max Acceleration of Toolhead	25,000 mm/s^2
Max Flow for Hotend	40 mm^3/s (Test parameters: 250 mm round model with a single outer wall; Bambu Lab ABS; 280 °C printing temperature)
Air Purification	
HEPA Filter Grade	H11
Activated Carbon Filter Type	Granulated Coconut Shell
VOC Filtration	Excellent
Particulate Matter Filtration	Supported
Cooling	
Part Cooling Fan	Closed Loop Control
Hotend Cooling Fan	Closed Loop Control
Main Control Board Fan	Closed Loop Control
Auxiliary Part Cooling Fan	Closed Loop Control
Exhaust Fan	Closed Loop Control
Filaments Supported	
PLA, PETG, PCTG, TPU, EVA, PE, PP, PHA	Supported
PVA, BVOH, support filament	Supported
Carbon/glass fiber reinforced: PLA, PETG	Supported

15. Printer Specifications

ABS, ASA, HIPS, PA, PAHT, PC, PET, PPA Carbon/glass fiber reinforced: ABS, ASA, HIPS, PA, PAHT, PC, PET, PPA	Supported
Filament Drying	Optional
Sensor	
Live View Camera	Built-in; 1920*1080
BirdsEye Camera	Optional; 3264*2448
Door Sensor	Supported
Filament Run Out Sensor	Supported
Nozzle Clumping Sensor	Supported
Filament Odometry[2)]	Supported
Power Loss Recovery	Supported
Electrical Requirements[3)]	
Voltage	High-voltage version: 200-240 VAC, 50/60 Hz Low-voltage version: 100-120 VAC, 50/60 Hz
Max Power[4)]	High-voltage version: 1200 W @ 220 V Low-voltage version: 1000 W @ 110 V
Standby Power	Wi-Fi disconnected: 11.7–12.2 W Wi-Fi connected: 12.2–12.7 W
Steady-State Power	High-voltage version: PLA (25°C): 210 W @ 220 V Low-voltage version: PLA (25°C): 210 W @ 110 V
Low Power Mode[5)]	950 W
Environmental Requirements	
Operating Temperature	10 °C - 30 °C
Electronics	
Touchscreen	5-inch 854*480 touchscreen

15. Printer Specifications

Storage	Built-in 64 GB EMMC and USB port
Control Interfaces	Touchscreen, mobile App, PC App
Motion Controller	Single-core Cortex-M4 and single-core Cortex-M7
Application Processor	Quad-core ARM with dedicated NPU
Software	
Slicer	Bambu Studio Supports third-party slicers which export standard G-code, such as SuperSlicer, PrusaSlicer and Cura, but certain advanced features may not be support-ed.
Network Control	
Ethernet	Not available
Wireless Network	Wi-Fi 6
Network Kill Switch	Not available
Removable Network Module	Not available
802.1X Network Access Control	Not available
Wi-Fi	
Operating Frequency	2412 - 2472 MHz, 5150 - 5850 MHz (FCC/CE) 2400 - 2483.5 MHz, 5150 - 5850 MHz (SRRC)
Wi-Fi Transmitter Power (EIRP)	2.4 GHz: <23 dBm (FCC); <20 dBm (CE/SRRC/MIC) 5 GHz Band1/2: <23 dBm (FCC/CE/SRRC/MIC) 5 GHz Band3: <30 dBm (CE); <24 dBm (FCC) 5 GHz Band4: <23 dBm (FCC/SRRC); <14 dBm (CE)
Wi-Fi Protocol	IEEE 802.11 a/b/g/n/ac/ax

1) The printer comes standard with 5 PrintTools and supports switching between up to 7 Tools. You can purchase additional PrintTools or CraftTools as needed.
2) For Bambu Lab filament, the initial weight can be read automatically through RFID or entered

manually. For third-party filament, enter the initial weight manually.

3) The printer's voltage specifications vary by sales region. Before use, please check the label next to the power socket on the printer to ensure the supplied voltage matches the indicated voltage.
4) To quickly heat the heatbed to the required temperature, the printer will run at maximum power for about 3–5 minutes.
5) If the circuit has limited power capacity, you can enable Low Power Mode. After it is enabled, the total energy use remains unchanged, and the heatbed and chamber will heat up more slowly.

16. Technical Support

If you need technical support, please use any of the following methods:

Method 1: Visit the Bambu Lab Wiki for tutorials and maintenance guidance.
wiki.bambulab.com

Bambu Lab Wiki

Method 2: Get in touch through one of the options listed in the Contact Us section of our Support Center.
bambulab.com/support

Bambu Lab Support Center

Method 3: Create a support ticket on Bambu Handy, from the Support Center section.

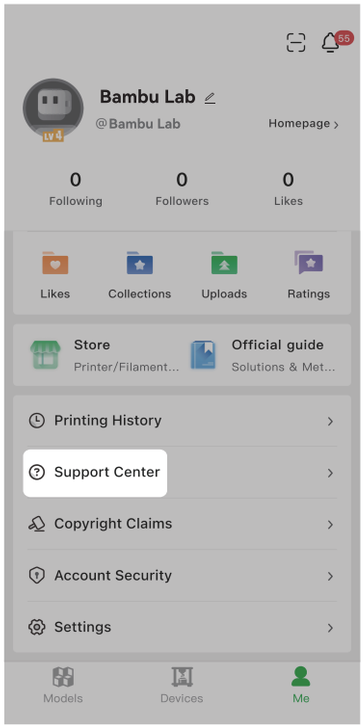

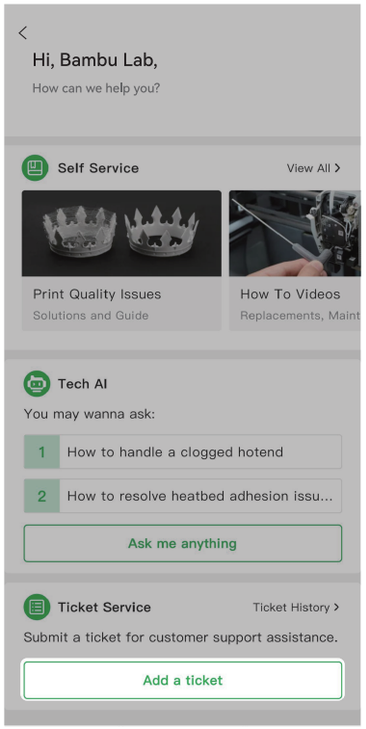



Bambu Lab

www.bambulab.com